CONTROL METHODS OF THE VSC-HVDC CONNECTED OFFSHORE WIND POWER PLANTS FOR FULFILLING; LVRT AND FREQUENCY REGULATION SUPPORT

Gül Kurt[1]

(Kocaeli University, Electrical Engineering Department, gul.kurt@kou.edu.tr, gulenderkurt@hotmail.com)

Abstract: Grid integration of offshore wind farms could seriously impact the operation and stability of their interconnected power system. To assist in maintaining the power system stability when large disturbances occur in the grid, modern offshore wind farms consisting of variable-speed wind turbines are required to provide ancillary services such as voltage and frequency control. The focus is given on the control methods of the VSC-HVDC connected offshore wind power plants for fulfilling the grid code requirements; LVRT and frequency regulation support.

Keywords: Off-shore wind farm, Low Voltage Ride-Through, Frequency Regulation, VSC-HVDC

INTRODUCTION

Grid codes are technical specifications that define requirements for any facility connected to electricity grids to ensure the integrity and safe, secure and economic operation of the electricity system. Such facilities include both power plants and loads. It is usually the responsibility of the power plant owner to demonstrate that the grid code requirements for the relevant connection point are satisfied. In order to avoid a system failure in case of slight voltage or frequency changes, any automatic disconnection of a power plant from the grid is always prohibited within certain voltage and frequency ranges during a last a certain time period. This requirement exists in all countries for all power plants, but the ranges and the time periods vary depending on the countries, and sometimes depending on the power plant.

Grid codes contain most technical rules related to the connection of power plants to the grid. They are issued by the Transmission System Operators (TSOs). The most important rules of these grid codes especially for offshore wind farms are

(1) dimensioning voltages and frequencies,
(2) voltage control and reactive power output requirements,
(3) fault ride through capability and
(4) frequency control.

Fault Ride-Through (FRT) capability refers to the ability of a Power Generating Module to remain connected to the power system during short periods of under-voltage or over-voltage. FRT requirements were developed to prevent large area voltage collapses in the grid, and since its introduction, grid stability has been largely improved.

The frequency in a power system depends on the balance between power production and consumption on a system-wide scale. A shortage of power production will cause the frequency to fall, while an excess of power production will cause the frequency to rise. Active power frequency response (frequency containment) is defined as an automatic adjustment of active power output in response to a change in system frequency from the nominal frequency. The purpose of such capability is to support a stable system frequency, increasing power output when the frequency is low and/or decreasing power output when the frequency is high.

Offshore wind power plants (OWPPs) connected to the main land through high voltage dc links based on voltage source converters (VSC-HVDC) are subject to grid code requirements which include fault ride-through (FRT) capability combined with dynamic voltage support, as well as primary frequency support.

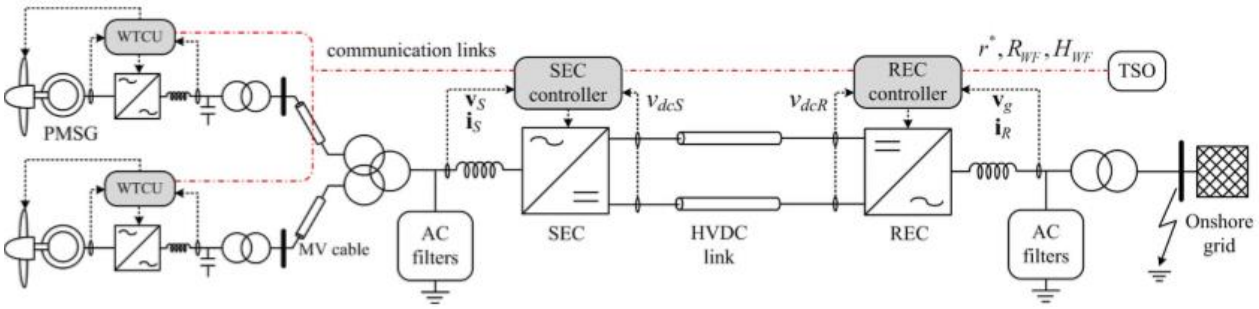

Fig. 1. Generic layout of an offshore WT connected through a VSC-based HVDC transmission link.

1. *LVRT methods for VSC HVDC grid-connected offshore wind farms*

When a fault occurs in the host power system, the AC voltage at the point of common connection is reduced. Therefore, the grid side converter will respond by injecting more active power into the grid. However, the active power capability of the converter is limited, due to the converter current limits. Besides, the injection of reactive current takes the highest priority over the injection of active current, for compensating the voltage dip. As the active power transferred from the grid-side converter to the host power system is reduced or limited, if the wind farm continues producing the same power, the excess power is accumulated in the capacitance of the HVDC transmission system and thereby the DC voltage starts rising. In order to prevent the DC voltage from exceeding its upper limit, a reduction of the wind farm production is necessary. However, the wind farm is not able to respond directly (without any external influence) to the changes in the grid, due to the AC/AC decoupling between the wind farm network and the host power system. Subsequently, if no action is taken, the HVDC system will trip and consequently the LVRT requirements are not met. In order to deal with this issue, additional control schemes are necessary.The control methods and advantage/disadvantage are summarized in Table 1.

Table 1. LVRT improvement methods for OWPPs.

LVRT improvement methods for OWPPs.	
Methods	Advantages and/or Disadvantages
The connection of a DC chopper at the DC link close to the grid side converter	fast power regulation additional cost of the component problem in removing the whole amount of heat
Transferring the data of conditions at the grid side to the wind farm side by communication	simple not reliable high communication time delay
The regulation of the frequency of the wind farm network by the offshore converter, as function of the DC voltage	stress over wind turbines in terms of speed variations recovery of the power production is slow
The switch-over of the DC voltage control between the two converters	Fault risk, unnecessary switch-over of the DC voltage control
The regulation of the AC voltage by the offshore converter, as function of the DC voltage	fast voltage reduction high stresses to mechanical and electrical equipment
switch-over of the DC voltage control	fault clearance is fast DC over-voltages are limited
The blocking of the converter valves, for limiting the current in the converter	quickly reach a steady state avoid over-currents and the tripping reliable

2. Frequency regulation methods by VSC HVDC grid-connected offshore wind farms

Offshore wind farms would not be directly affected by onshore system disturbances due to the decoupling of VSC-HVDC. The decoupling would prevent offshore wind farms from immediate responding to the frequency excursion of onshore AC network. Since the frequency of the offshore network is decoupled from the onshore grid frequency, the contribution of the wind farm to frequency regulation can only be achieved if the onshore grid frequency is communicated to the offshore network. In this way, the wind farm can adjust its production according to the onshore grid frequency. There are four control schemes for accomplishing this task are summarized in Table 2.

Table 2. Frequency regulation improvement methods for OWPPs

Frequency regulation improvement methods for OWPPs.	
Methods	Advantages and/or Disadvantages
The use of DC voltage variations	the DC capacitance and voltage variation for a certain VSC-HVDC are limited the power released / absorbed by the DC capacitance is also limited
The communication of the onshore grid frequency to the offshore HVDC converter	communication delay
The communication of the onshore grid frequency directly to the turbine converters	communication process delay, without delays for calculations.
PI control loop is added to the offshore VSC	effectively reduce the communication delay.

CONCLUSIONS

Some of control methods of VSC-HVDC connected offshore wind power plants for grid's LVRT and frequency regulation requirements are summarized and criticized in this paper. The main problem for the HVDC link used for grid connection of the offshore wind plants is the over-voltages that appear in the DC link during the fault period.
VSC-HVDC transmission system is used for the grid connection of the offshore wind power plants, the onshore power system frequency cannot be detected from the offshore wind turbines due to the DC circuit decoupling, unless communication link is utilized. HVDC connected wind power plant shall have access to the remote onshore system frequency where the onshore converter station is connected by means of a fast communication link. Fiber-optic is the most commonly used technology. It is embedded in the offshore HVDC cable which connects the onshore and the offshore converters. Due to decoupling wind farm and the AC grid, communication between two sides is main challenge.

REFERENCES

Silva B.A., (2013), Control Strategies for Ancillary Services Provision in Interconnected Transmission Systems with Offshore Wind Farms, University of Porto, Portugal

Chaudhary S.A., (2011), Control and protection of wind power plants with VSC-HVDC connection,

Aalborg University, Denmark

Sharma R., Andersen, M., Akhmatov V., Jensen K. H., Rasmussen, Wederberg T., (2012), Electrical Structure of Future Off-shore Wind Power Plant with a High Voltage Direct Current Power Transmission, Technical University of Denmark

Nanou S., Papathanassiou S., (2016), Grid Code Compatibility of VSC-HVDC Connected Offshore Wind Turbines Employing Power Synchronization Control, IEEE Transactions on Power Systems,31, 5042 - 5050

Vrana T. K., Flynn D., Lazaro E. G., Kiviluoma J., Marce D., Cutululis N., J. Smith C., (2018), Wind power within European grid codes: Evolution, status and Outlook, DOI: 10.1002/wene.285

Ndreko M., (2016), Offshore Wind Plants with VSC-HVDC Connection and their Impact on the Power System Stability: Modeling and Grid Code Compliance, Delft University of Technology