FRACTURE TOUGHNESS OF CALCIUM CARBONATE FILLED POLYPROPYLENE BLOCK COPOLYMER COMPOSITE STORED AT A PLACE WHICH HAVE NO DAYLIGHT

E.G. Yıldız[1], Ş. Şahin[2*] and T. Şahin[3]

[1]*Graduate School of Natural and Applied Science, Istanbul Technical University, Turkey - elifgulsahyildiz@yahoo.com*
[2*]*Department of Mechanical Engineering, Kocaeli University, Turkey - sensah@kocaeli.edu.tr*
[3]*Department of Mechanical Engineering, Kocaeli University, Turkey - tulsah@kocaeli.edu.tr*

Abstract - In this experimental study, the bending fracture toughness of calcium carbonate (CC) filled polypropylene block copolymer (PPB) composite material had been studied. The long-term strength (life or time) values of materials are usually obtained as a result of long-term tests also after production. For example it's known that tensile strength of polypropylene based material is decreased depending upon time after production..To have related results, the aim of this study is to compare the fracture toughness as result of bending between pure PPB and PPB/CC composite materials which were stored at a place which have no daylight. To examine the effect of CC filler content, PPB/CC composite materials, 2.15 average particle sized CC filler content added to pure PPB in different ratios of 10%, 15%, 17,5%, 20% by volume. Pure PPB and PPB/CC composite materials were stored at comfort conditions with no-daylight for at least 50 months. Three point bending tests were performed in according to ISO 13586. When the experimental results were evaluated according to ISO 13586 standard, it was clearly seen that bending fracture toughness of PPB/CC composite materials were higher than its pure PPB for every volume fraction. Also it could be said that the highest increase in fracture toughness was seen on 15% CC filled PPB/CC composite material and the lowest on 20% CC filled PPB/CC composite material.

Keywords – Fracture toughness, Tree-point bending test, Polypropylene block copolymer, Calcium carbonate.

Introduction

Polypropylene (PP) is a mostly preferred thermoplastic between all other thermoplastic materials because of its price/performance ratio, good reproducibility and easy recyclability properties. Calcium carbonate (CC) is commonly used in plastic industry concerning with being an economic material and its reproducibility in a wide particle distribution. Thermoplastic composite materials have been produced by use of CC with different particle sizes and different percentage in weight (wt %) [1]. It had been tried for determining effect of CC particle size and filler amount to uniaxial tensile properties of thermoplastic materials [2]. There is a special relation between fracture toughness (as a mechanical property) and component design. In general although Izod and Charpy impact tests are used to determine fracture toughness, fracture mechanic theories are used for characterization of fracture toughness. However in experimental studies generally test specimens, which complete its conditioning period after production, is used. Within this case, aim of this study is to investigate bending fracture toughness of pure PPB and PPB/CC composite materials which were stored after their production for a long time.

Experimental

Materials

In this study, a polypropylene block copolymer (PPB) with commercial name of BorECO™ BEC5015 (Borealis A/S) was used. Density and melting flow rate (MFR) values of this material are 900 kg/m^3 and 0.30 g/10 min (230°C/2.16kg), respectively. Tensile modulus of 1500 MPa, yield stress of 30 MPa and yield elongation of 10% values are some mechanical properties of pipe raw material for non-pressurized pipe systems which were taken from manufacturers (Borealis 22.01.2008 Ed.9) .

To investigate effect of filler content, CC with commercial name of Mikrocarb-2X (Mikro Mineral Endüstriyel Mineraller San. ve Tic. A.Ş.) was used. It's average particle size and density are 2.15 μm and 2700 kg/m^3, respectively. Manufacturer values about particle size distribution analysis results of this material is given in Table 1 below (Mikro Mineral 2004 Rev:03).

Table 1 Particle Size Distribution

Particle Size	Unit	Typical Value
Average dia. d(0.5)	μm	2.15
Top Cut d(0.97)	μm	11.600
Particles under size of 2 μm	%	48
Sieve residual of 45 μm	%	0.01

Twin-screw extrusion machine with screw length (L/D) value of 38,5, screw length (L) of 2700 mm (Coperion Werner and Pleiderer ZSK 70 Mcc) was used in production line of PPB/CC composite raw materials. PPB/CC composite raw materials filled with percentage of 10, 15, 17,5 and 20 CC in volume (25.00, 34.62, 38.89 ve 42.86 % in weight) were produced by physical modification. Production of composite raw materials was performed with vacuum pressure of -1 bar, rotation speed of 750 rpm, production capacity of 500 kg/h, zone temperature range between 220°C and 245°C and cooling water temperature of 30°C. Dehumidification at 50°C for 4h was performed for every composite raw material.

Multi-Purpose Specimens Preparation

Pure PPB and PPB/CC composite raw materials was injection molded according to ISO 3167 Type-1A multi-purpose test specimens which have dimensions as 216 mm x 10 mm x 4 mm by an injection machine (Arburg Allrounder 370 CMD) with 25 mm screw diameter (D) and 20 screw length (L/D). In molding process which was achieved by considering ISO 294-1 standard, injection parameters which are fixed 225°C as melt temperature, 225°C/220°C/220°C/215°C as zone temperature, 1450 bar as injection pressure, 650 bar as holding pressure, 60 s as waiting time and 30°C as die cooling temperature used.

Multi-purpose test specimens were stored at comfort conditions with no-daylight for at least 50 months. After this storage period three point bending (SENB) specimens were prepared from centre region of them by cutting with an circular saw. And then V notching with depth of 5 mm and angle of 45° was applied to 10 mm sized edge of 42 mm x 10 mm x 4 mm sized specimens. SENB specimens for this study was produced and used in L-T direction according to 13586 and in LN position according to ISO 178.

Three-Point-Bending Test

Three-point-bending (SENB) tests were done considering ISO 527-1 (or ISO178) with a tensile testing machine (INSTRON 4411 H 4240) which has a capacity of 5 kN and Bluehill-2 software (version.2.6) on it. V notched SENB specimens was inserted to span between rollers of tensile test machine so that bending force and notch length are parallel to each other. SENB tests were performed with bending test speed of 10 mm/min and travel of 12 mm. Load-displacement (F-s) curves for every SENB specimen were derived according to test results. In first step, the highest load (F_{max}) value which was achieved in tests was determined in F-s curves. After that slope of the line which is tangent to linear part of F-s curve was decreased in amount of 5% as mentioned in ISO 13586. The load at the point which new tangential line cuts F-s curve was accepted as crack growth initiation load (F_Q).

Gained data's were evaluated according to linear elastic fracture mechanics (LEFM) criteria by using equations 1 and 2 which are mentioned in ISO 13586. Fracture toughness values (Kc) of pure PPB and PPB/CC composite materials were then determined.

$$f = 6\alpha^{\frac{1}{2}} \frac{1{,}99-\alpha(1-\alpha)(2{,}15-3{,}93\alpha+2{,}7\alpha^2)}{(1+2\alpha)(1-\alpha)^{3/2}} \quad (1)$$

$$K_c = \frac{(F_Q)F_{max}}{h\sqrt{w}} f(a/w) \quad (2)$$

For these equations below definitions were used;

- F_{max} Maximum achieved load in tests
- F_Q the load value achieved when slope is
- h Thickness of test specimen
- w Width of test specimen
- a Notch depth
- f(a/w) Correction factor which changes according to
- α (a/w) value

Tests were done under 22°C ± 1°C temperature and %50 ± 10 humidity and for each value at least 5 test specimens were used. Obtained values were statistically considered according to Chauvenet Criteria [3]. Results are shown in graphics based on values obtained from pure PPB material and changes in fracture toughness properties are shown in graphics depending on different percentages of weight, according to introduction base value and pure PPB by percentages.

Results and Discussion

It should be stated especially that pure PPB raw material was used without any effect from twin screw extrusion parameters, like PPB/CC composite raw materials. Also, both pure PPB and PPB/CC composite raw materials were formed to multi-purpose test specimens by injection molding with constant injection parameters (zone temperatures, heat load amount, etc.).

Load-displacement curves of pure PPB and PPB/CC composite materials were given in Figure 1 and Figure 2, respectively.

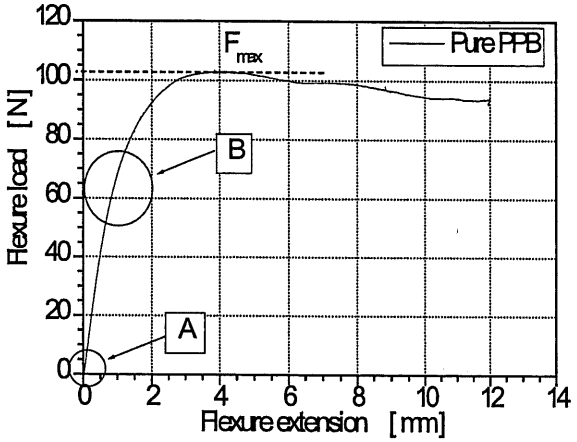

Figure 1 Load-displacement curve from pure PPB material

When F-s curves were reviewed together, it was noticed that the achieved maximum load (F_{max}) value occurred in pure PPB material. Then it was determined that F_{max} value decreased depending upon CC filler content. At last, it was also determined that there was a non-linear change (marked with A in Fig.1 and 2) near to initial regions of F-s curves as shown in Figure 3.

In Figure 4, K_C values of pure PPB and PPB/CC composite materials which were calculated with use of Fmax value were given depending upon CC filler content. It was seen that K_C value of pure PPB was decreasing with addition of CC filler when Figure 4 is reviewed. Also it was determined that K_C value of PPB/CC composite material increased with increase of filler amount. Therefore it was seen that there was a sudden and instant displacement increase (indicated with B in Fig. 1 and 2) in load-displacement curves of pure PPB and PPB/CC composite materials.

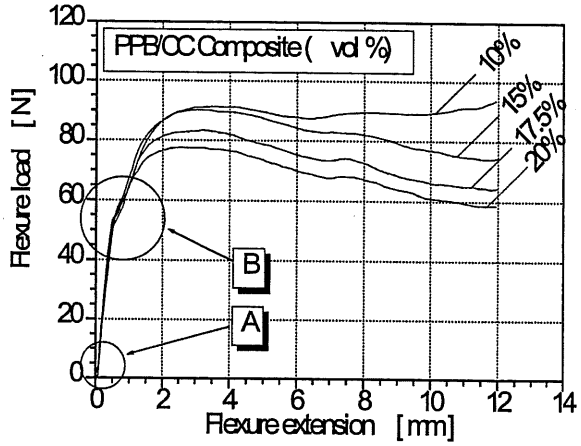

Figure 2 Load-displacement curves from PPB/CC composite materials

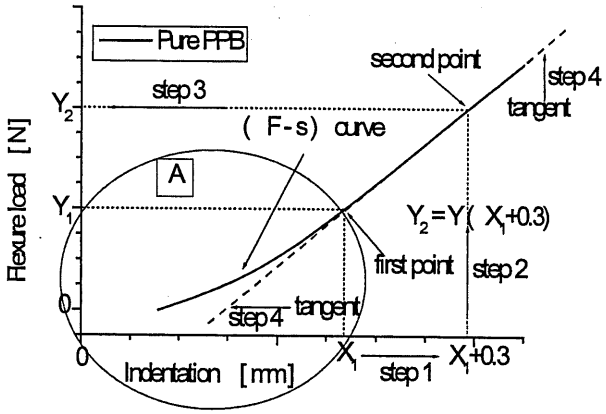

Figure 3 Load-indentation curve determined on an notched test specimen from pure PPB and PPB/CC composite materials

In final step K_C values of pure PPB and PPB/CC composites were calculated by using crack initiation load (F_Q) values and a curve for F_Q was given depending upon CC filler content as below. It was seen that K_C value of pure PPB was increasing with addition of CC filler when Figure 5 is evaluated. Also it was determined that K_C value of PPB/CC composite material firstly increased with increase of filler content and then decreased after a maximum value.

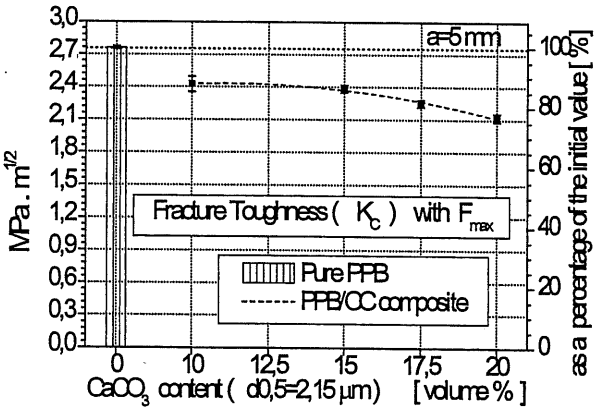

Figure 4 Change in K_c values of pure PPB which were calculated with F_{max} due to CC filler content

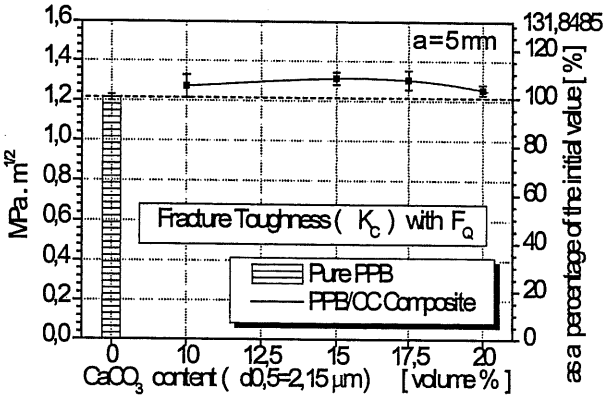

Figure 5 Change in K_C values of pure PPB which were calculated with F_Q due to CC filler content

Conclusions

It was determined that K_C of pure PPB decreases with increasing CC filler amount when K_C was calculated with use of F_{max} load. On the other hand, it was again determined that K_C of pure PPB increases with increasing CC filler amount when K_C was calculated with use of F_Q load. In this case, it can be said that crack initiation and growth behaviors for micro particle filled PPB composite materials is different from the behaviors which are seen for pure and discontinuous fiber reinforced plastic composite materials when load-displacement curves and points mentioned in ISO 13586 are considered. In this context, based on the SENB test results and load-displacement curves the particle filled composites properties were evaluated between pure plastics and non-continuous fiber reinforced plastics according to associated standard (ISO 13586).

Acknowledgements

This study was performed to utilize the test specimens which remained after the completed project of The Scientific and Technological Research Council of Turkey (TUBITAK) with title of "Optimization of Short and Long Term Internal Pressure Performance Properties of Polyolefin Pipes with Mineral Fillers", (project number: 105M220).

The authors would like to thank to *"EMAŞ Plastik San. Tic.A.Ş."* for helping the manufacturing process of PPB/CC composite raw materials, and for helping in the process of injection molded multi-purpose test pieces in their plants.

References

1. W.C.J. Zuiderduin, C. Westzaan, J. Hue'tink, R.J. Gaymans: Polymer 44 (2003) 261.
2. Q. Wulin, K. Mai, H. Zeng: J. Appl. Polym. Sci. 77 (2000) 2974.
3. J.P., Holman, Experimental Methods for Engineers, 6th Ed., McGraw-Hill, (1994).

Abstracts

General Symposia

S01 - Mixing and Compounding 1
S02 - Films and Fibers 13
S03 - Processing and Forming (Combined)* 26
S04 - Injection Molding and Molds 42
S05 - Rheology and Rheometry 61
S06 - Polymer Nanostructures and Nanocomposites 73
S07 - Natural Based and Biodegradable Polymers 107
S08 - Polymer Foams 125
S09 - Polymer Composites 137
S11 - Elastomers and Thermoplastic Elastomers 163
S12 - Modeling and Simulation 171
S13 - Polymer Blends 188
S14 - Reactive Processing 202

Special Symposia

210

S15 - Plastic Solutions for Renewable Energy Technologies
S16 - Plastic Solutions for E-mobility
S17 - Plastic Solutions for Construction and Housing
S18 - Additive Manufacturing for Plastic Components
S19 - Manufacturing of Load-Carrying Hybrid Polymer Structures
S20 - Microtribology and Surface Analysis
S21 - DRG: Fundamental and Applied Rheology
S22 - Thermo-Mechanically Graded Materials

** The two symposia "Extrusion, joining, and coating" as well as "Blow molding, Thermoforming, and Rotomolding" have been combined.*

S07-936 **Preliminary Studies On The Enhancement Of PLA Melt Strength**
Carbone Maria Josefina, Van Puyvelde Peter*

S08 - Polymer Foams

S08-278 **Prediction Of An Effective Physical Foamability Of LLDPE/LDPE Blends From Rheological Assessments**
Cardoso Elisabeth Carvalho Leite, Scagliusi Sandra Regina, Lugão Ademar Benevolo*

S08-310 **Surface Modification Of Polypropylene Based Particle Foams**
Schreier Peter, Altstädt Volker, Trassl Christian*

S08-320 **Use Of The Bottom Phase Residue From Polyurethane Glycolysis As Polyol Polymerisation Initiator**
Simón Herrero Diego, Borreguero Simón Ana María, de Lucas Martínez Antonio, Molero Cerezo Carolina, Rodríguez Romero Juan Francisco*

S08-324 **Effect Of The Microencapsulated PCMs Type On Rigid Polyurethane Foams Properties**
Borreguero Ana Maria, Carmona Manuel, Rodriguez Juan Francisco, Valverde Jose Luis*

S08-511 **Rheology Of Polystyrene Dissolved In Monoterpenes**
Machado Ricardo Antonio Francisco, Cella Rafael Ferraz, Bolzan Ariovaldo*

S08-573 **An Experimental Apparatus To Characterize Phase Separation In Polymer Solutions**
Mannella Gianluca Antonio, La Carrubba Vincenzo, Brucato Valerio*

S08-597 **Foaming Of Recycled Cross-linked Low Density Polyethylenes Via Supercritical Fluid Reactions**
Hong Soon Man, Baek Bumki, Shin Jiwook, Koo Chong Min*

S08-763 **Development Of Polymer Wicks For EEG Electrodes**
Martins Ana C., Mota Armando R., Nobrega Joao Miguel, Fonseca Carlos, Machado Ana Vera, Vaz Filipe*

S08-775 **Potential Of Carbon-Based Nanoparticles (CNT, CB, Graphene) To Increase The Nucleation Density Of Extruded Polystyrene Foams**
Okolieocha Chimezie , Altstädt Volker*

S08-821 **Foam Injection Molding Of Thermoplastic Elastomers: Blowing Agents, Foaming Process And Characterization Of Structural Foams**
Ries Stefan, Spörrer Andreas, Altstädt Volker*

S08-882 **Chemical Resistance Of Core-Shell Particles (PS/PMMA) Polymerized By Seeded Suspension**
*Ribeiro Luiz Fernando, Antunes Mariana Zimmermann, Gonçalves Odinei Hess, Machado Ricardo Antonio Francisco**

S09 - Polymer Composites

S09-1 **Single Polymer Composite Made Of Polypropylene Fabric And Matrix**
*Agrawal Bhawana**

S09-118 **Tribological Properties Of PTFE Composite Films Filled With Carbon Nanofiber**
Enomoto Kazuki, Yoshikawa Shigeki, Hirabayshi Masanori*

S09-135 **Role Of Different Compatibilizing Approaches On The Microstructure And Mechanical Properties Of Polypropylene/Talc Composites**
Homayounfar Seyedeh Zohreh, Bagheri Reza*

S09-169 **Reuse Of Rigid Polyurethane Foam As Filler For Polypropylene Matrix**
Souza Adriana M. Catelli, Melo Luiz Alberto*

S09-240 **Processing Of Microencapsulated Dyes For The Visual Inspection Of Fibre Reinforced Plastics**
*Kerschbaum Martin**

S09-297 **Structure And Properties Of Halogen-Free Flame Retardant Poly (Vinyl Alcohol)/Melamine Phosphate Composites**
*Guo Dan, Bai Shibing, Wang Qi**

S09-328 **Structure And Antibacterial Properties Of Polydimethylsiloxane And Microcrystalline Cellulose Composites**
Jankauskaitė Virginija, Lisauskaitė Aistė, Prosyčevas Igoris, Vitkauskienė Astra*

S09-336 **Tensile Properties Of Ground Colemanite Filled Polyamide 6.6 Composite**
Mızrak Semih, Şahin Şenol, Şahin Tülin*

S09-345	**Effect Of Talc On The Hoop Stress Of Polypropylene Blok Copolymer Composite Pipes** *Findik Erkut*, Şahın Şenol*
S09-352	**Tensile Properties Of Calcium Carbonate Filled Polypropylene Block Copolymer Composite Pipes** *Altay Anıl, Akten Hande, Şahin Şenol**
S09-356	**Investigations On The Thermoplastic Fiber Spraying Process And The Variothermal Consolidation Of 3D Preforms** *Hopmann Christian**
S09-36	**Quantifying Hierarchical Mixture Quality In Polymer Composite Materials: Structure And Inhomogeneity In Multiple Scales** *Nakayama Yasuya*, Kajiwara Toshihisa*
S09-392	**Processing Of Recycled Expanded Polystyrene And Waste Newsprint Fibers Composites** *Borsoi Cleide, Cavinato Camily, Zattera Ademir Jose, Scienza Lisete Cristine**
S09-394	**High Renewable Content Sandwich Structures Based On Flax-Basalt Hybrids And Bio-based Epoxy Polymers** *Colomina Sandra, Boronat Teodomiro, Fenollar Octavio, Sánchez-Nacher Lourdes, Balart Rafael**
S09-44	**Effects Of Screw Speed On The Properties Of Plasticized PLA/POSS Composites** *Kodal Mehmet*, Şirin Hümeyra, Özkoç Güralp*
S09-464	**Evaluation Of Long-Term Performance Of Glass-Fiber Reinforced Engineering Plastics For Hot Water Supply** *Yamamoto Hiroyuki*, Yamada Kazushi, Nishimura Hiroyuki*
S09-5	**Mechanical, Dielectric, And Electromechanical Properties Of SEBS/CB And SEBS/SWCNT Nanocomposites** *Koo Chong Min*, Hong Soon Man*
S09-507	**Mechanical Fatigue Properties Of Hybrid Polypropylene Composites With Coconut Fiber And Talc** *Es Marcela Caroline*, Bettini Silvia Helena Prado , Sousa Jose Alexandrino*
S09-508	**Processing Of Post-Consumer HDPE Reinforced With Wood Flour: Effect Of Functionalization Methodology** *Catto Andre Luis*, Montagna Larissa Stieven, Rossini Katiandry, Santana Ruth Marlene Campomanes*
S09-533	**Effect Of The Injection Processing On The Mechanical Properties Of The Nanocoposites Polyamide 6/Glass Fiber/Montmorillonite – (PA6/GF/MMT)** *Damiani Renato Adriano, Fiori Jr. Jair, Silvano Josiane da Rocha, Neto Almir Barros da Silva Santos, Araújo Pedro Henrique Hermes de, Peterson Michael, Fiori Márcio Antônio**
S09-536	**Solid State Rheology Of Polymer Films And Layers: Influence Of The Thickness On Mechanical Properties Of A PU-Adhesive Between Metallic Substrate** *Schawe Jürgen E.K.*, Possart Wulff, Krogh Ludovic*
S09-540	**Preparation Of Polyaniline/Sodium Alanate Hybrid Using A Spray-Drying Process** *Moreira Bruna Rodrigues, Passador Fabio Roberto*, Pessan Luiz Antonio*
S09-589	**Development And Mechanical Characterization Of A Composite Of Polypropylene (PP) With Grinding Sludge As Fiber** *Rodrigues Diego Abich*, Oliveira Alex Sandro Matos de, Specht Ricardo Frazão, Campomanes Ruth Marlene*
S09-674	**Optimization Of Condition For Simulant Of Highly-Filled Energetic Materials** *Choi Jong Han, Yoo Ji Soo, Lee Sangmook, Han Sang Keun, Kim Hyoun Soo, Lee Keun Deuk, Shim Jung Seob, Lee Jae Wook**
S09-712	**Polymeric Biocomposites Of Poly (Butylene Adipate-Co-Terephthalate) Reinforced With Munguba Natural Fibers** *Pinheiro Ivanei Ferreira**
S09-728	**Properies Of Biodegradable TPU/Waste Chicken Feathers Composites And Their Investigation Of Potential Use As Tissue Engineering Scaffold** *Ozkoc Guralp*, Gokce Ozge, Kasap Murat*
S09-761	**Preparation And Characterization Of Composites Based On Polyester And Starch Matrix With Vermiculite** *Leite Marcia Christina Amorim Moreira*, Oliveira marcia Gomes, Oliveira Marcelo Ferreira Leão, China Aline Leonardo*
S09-803	**The Filler Shape Dependent Mechanical Properties Of Wood Polymer Composites With Polyethylene And Poly(Vinyl Chloride) Matrix** *Tomaszewska Jolanta*, Sterzynski Tomasz, Krolikowski Krzysztof, Zuk Tomasz*
S09-842	**Polyamide 6/Nano-Silicon Dioxide Nanocompósitos** *Ambrósio José Donato*, Queiroz Breno Dutra*

General Symposia:

S01 - Mixing and Compounding

S02 - Films and Fibers

S03 - Processing and Forming (Combined)*

S04 - Injection Molding and Molds

S05 - Rheology and Rheometry

S06 - Polymer Nanostructures and Nanocomposites

S07 - Natural Based and Biodegradable Polymers

S08 - Polymer Foams

S09 - Polymer Composites

S11 - Elastomers and Thermoplastic Elastomers

S12 - Modeling and Simulation

S13 - Polymer Blends

S14 - Reactive Processing

Special Symposia:

S15 - Plastic Solutions for Renewable Energy Technologies

S16 - Plastic Solutions for E-mobility

S17 - Plastic Solutions for Construction and Housing

S18 - Additive Manufacturing for Plastic Components

S19 - Manufacturing of Load-Carrying Hybrid Polymer Structures

S20 - Microtribology and Surface Analysis

S21 - DRG: Fundamental and Applied Rheology

S22 - Thermo-Mechanically Graded Materials

** The two symposia "Extrusion, joining, and coating" as well as "Blow molding, Thermoforming, and Rotomolding" have been combined.*

back to symposia

S09 - Polymer Composites

- Keynotes
- Oral Presentations
- Poster

back to S09

S09 - Polymer Composites

Poster:

S09-1: *Bhawana Agrawal*
Single Polymer Composite made of polypropylene fabric and matrix

S09-5: *S. M. Hong, C. M. Koo*
Mechanical, Dielectrical and Electromechanical Properties of SEBS/CB and SEBS/SWCNT Nanocomposites

S09-36: *Yasuya Nakayama, Toshihisa Kajiwara*
Quantifying hierarchical mixture quality in polymer composite materials: structure and inhomogeneity in multiple scales

S09-44: *Mehmet Kodal, Hümeyra Şirin, Güralp Özkoç*
Effects of Screw Speed on the Properties of Plasticized PLA/POSS Composites

S09-89: *Jacobsen, Jens A.*
Investigating the applicability of direct analysis ion mobility for the analysis of synthetic polymers

S09-118: *K. Enomoto, S. Yoshikawa, M. Hirabayashi*
Tribological properties of PTFE composite films filled with Carbon Nanofiber

S09-135: *S. Z. Homayounfar, R. Bagheri*
Role of Different Compatibilizing Approaches on the Microstructure and Mechanical Properties of Polypropylene/Talc Composites

S09-169: *Adriana Martinelli Catelli de Souza, Luiz Alberto de Melo*
Reuse of rigid Polyurethane foam as filler for Polypropylene matrix

back to S09

S09-240: *Ch. Hopmann, M. Kerschbaum, K. Küsters*
Processing of microencapsulated dyes for the visual inspection of fibre reinforced plastics

S09-297: *D. Guo, S.B. Bai, Q. Wang*
Structure and Properties of Halogen-free Flame Retardant Poly (vinyl alcohol)/Melamine Phosphate Composites

S09-328: *V. Jankauskaitė, A. Lisauskaitė, I. Procyčevas, A. Vitkauskienė*
Structure and antibacterial properties of polydimethylsiloxane and microcrystalline cellulose composites

S09-336: *S. Mızrak, Ş. Şahin, T. Şahin*
Tensile Properties of Ground Colemanite Filled Polyamide 6.6 Composite

S09-345: *E. Fındık, Ş. Şahin*
Effect of talc on the hoop stress of polypropylene block copolymer composite pipes

S09-348: *E.G. Yıldız, Ş. Şahin, T. Şahin*
Fracture Toughness of Calcium Carbonate Filled Polypropylene Block Copolymer Composite Stored at a Place which have no daylight

S09-352: *A. Altay, H. Akten, Ş. Şahin*
Tensile Properties of Calcium Carbonate Filled Polypropylene Block Copolymer Composite Pipes

S09-353: *Ç. Yılmaz, B. Yoro, Ş. Şahin*
Effect Of Cold Drawing And Thermal Aging On Mechanical And Thermal Properties of Calcium Carbonate Filled Polypropylene Block Copolymer Composite

S09-356: *Ch. Hopmann, M. Poehler, A. Boettcher, K. Fischer, R. Schoeldgen*
Investigations on the thermoplastic fiber spraying process and the variothermal consolidation of 3D preforms

S09-392: *C. Borsoi, C. Cavinato, L.C. Scienza, A.J. Zattera*
Processing of recycled expanded polystyrene and waste newsprint fibers composites

S09-394: *S. Colomina, T. Boronat, O. Fenollar, L. Sánchez-Nacher, R. Balart*
High renewable content sandwich structures based on flax-basalt hybrids and biobased epoxy polymers

S09-464: *Hiroyuki Yamamoto, Kazushi Yamada, Hiroyuki Nishimura*
Evaluation of Long-Term Performance of Glass-Fiber Reinforced Engineering Plastics for Hot Water Supply

S09-508: *A. L. Catto, L. S. Montagna, K. Rossini, R. M. C. Santana*
Processing of post-consumer HDPE reinforced with wood flour: effect of functionalization methodology

S09-533: *R. A. Damiani, J. Fiori Jr., J. R. Silvano, A. B. S. Santos Neto, P. H. H. Araújo, M. Peterson, M. A. Fiori*
Effect of the injection processing on the mechanical properties of the nanocoposites polyamide 6/glass fiber/montmorillonite – (PA6/GF/MMT)

S09-536: *J.E.K. Schawe, W. Possart, L. Krogh*
Solid State Rheology of Polymer Films and Layers: Influence of the Thickness on Mechanical Properties of a PU-Adhesive between Metallic Substrate

S09-540: *B. R. Moreira, F. R. Passador, L. A. Pessan*
Preparation of Polyaniline/Sodium Alanate Hybrid using a Spray-Drying Process

S09-589: *D. A. Rodrigues, A. S. M. Oliveira, R. F. Specht, R. M. C. Santana*
Development and mechanical characterization of a composite of polypropylene (PP) with grinding sludge as fiber

S09-674: *J. H. Choi, J. S. Yoo, S. Lee, S. K. Han, H. S. Kim, K. D. Lee, J. S. Shim, J. W Lee*
Optimization of Condition for Simulant of Highly-filled Energetic Materials

S09-712: *I. F. Pinheiro, L. H. I. Mei, A. R. Morales*
Polymeric biocomposites of poly (butylene adipate-co-terephthalate) reinforced with munguba natural fibers

S09-728: *G. Ozkoc, O. Gokce, M. Kasap*
Properies of biodegradable tpu/waste chicken feathers composites and their investigation of potential use as tissue engineering scaffold

S09-761: *Marcelo F.L. Oliveira, Aline L. China, Marcia G. Oliveira, Márcia C.A.M. Leite*
Preparation and characterization of composites based on polyester and starch matrix with vermiculite

S09-803: *J. Tomaszewska, T. Sterzyński, T. Żuk, K. Królikowski*
The filler shape dependent mechanical properties of wood polymer composites with polyethylene and poly(vinyl chloride) matrix

S09-842: *Ambrósio, José Donato*
Polyamide 6/Nano-Silicon Dioxide Nanocompósitos

back to S09

S09-844: *L.S. Lima, L.B. Gonella, J. Junges, A.J. Zattera*
Influence of different nanofillers on the thermal and mechanical properties of polypropylene

S09-880: *V. de Macedo, L.C. Scienza, A.J. Zattera, C.A. Ferreira, D. Piazza*
Influence of the addition of muscovite mica and agalmatolite on the properties of polymeric nanocomposites applied to epoxy-based powder coating

S09-901: *T-M. Süld, T. Kaljuvee*
Thermal degradation behaviours of Polyethylene reinforced with inorganic filler

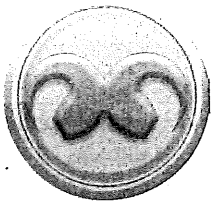

The Polymer Processing Society

The Polymer Processing Society (PPS) was founded in March 1985 at the University of Akron, Ohio, USA. The intent was to provide a mechanism and format for interaction and presentation of research results in the international polymer processing community. The goals of PPS are to foster scientific understanding and technical innovation in polymer processing by providing a discussion forum for the worldwide community of engineers and scientists in the field. The thematic range encompasses all formulations, conversion and shaping operations applied to polymeric systems in the transformation from their monomeric forms to commercial products.

Membership for the PPS is open to all researchers in the field, and to all persons who feel the activities of the society advance their professional development.

PPS website : www.tpps.org

Founding Meeting	Akron, OH, USA, 1985
2nd	Montreal, Canada, 1986
3rd	Stuttgart, Germany, 1987
4th	Orlando, FL, USA, 1988
5th	Kyoto, Japan, 1989
6th	Nice, France, 1990
7th	Hamilton, Canada, 1991
8th	New Delhi, India, 1992
9th	Manchester, UK, 1993
10th	Akron, OH, USA, 1994
11th	Seoul, Korea, 1995
12th	Sorrento, Italy, May 27-31, 1996
13th	New York City, NY, USA, 1997
14th	Yokohama, Japan, 1998
15th	's-Hertogenbosch, The Netherlands, 1999
16th	Shanghai, China, 2000
17th	Montreal, Canada, 2001
18th	Guimaraes, Portugal, 2002
19th	Melbourne, Australia, 2003
20th	Akron, OH, USA, 2004
21st	Leipzig, Germany, 2005
22nd	Yamagata, Japan, 2006
23rd	Salvador, Brazil, 2007
24th	Salerno Italy, 2008
25th	Goa, India, 2009
26th	Banff, Canada, 2010
27th	Marrakesh, Morocco, 2011
28th	Bangkok, Thailand, 2012
29th	Nuremberg, Germany, 2013

PPS Executive Officers 2011 – 2013

President
Ica Manas-Zloczower (Cleveland, OH, USA)

Past President
Takeshi Kikutani (Tokyo, Japan)

President-Elect
Giuseppe Titomanlio (Salerno, Italy)

Secretary
Evan Mitsoulis (Athens, Greece)

Treasurer
M. Cengiz Altan (Norman, OK, USA)

Member-at-Large
Sati Bhattacharya (Melbourne, Australia)
Mosto Bousmina (Rabat, Morocco)

IPP-Chief Editor
Andrew Hrymak (London, ON, Canada)

PPP-Chief Editor
Musa Kamal (Montreal, PQ, Canada)

International Representatives 2011 – 2013 (listed alphabetically)

Volker Altstaedt (Germany)
Phil Coates (UK)
Jose Covas (Portugal)
Anup K. Ghosh (India)
Elias Hage (Brazil)
Laszlo Halasz (Hungary)
Jean-Marc Haudin (France)
Clemens Holzer (Austria)
Ibnelwaleed Ali Hussein (Saudi Arabia)
Toshitaka Kanai (Japan)
Sam Kenig (Israel)
Jin Kon Kim (Korea)
Kiyohito Koyama (Japan)
Shih-Jung Liu (Taiwan)
Y. Menceloglu (Turkey)
Paula Moldanears (Belgium)
Hossein Nazockdast (Iran)
Luiz Antonio Pessan (Brazil)
Gerrit W.M. Peters (The Netherlands)
Hans-Joachim Radusch (Germany)
Petr Saha (Czech Republic)
Krisda Suchiva (Thailand)
Uttandaraman Sundararaj (Canada)
Qi Wang (China)
Marino Xanthos (USA)
Xi Xu (China)

Plenary Speakers

Prof. Edwin L. Thomas
Massachusetts Institute of Technology, USA

Prof. Alan H. Windle
University of Cambridge, United Kingdom

Prof. Axel H. E. Mueller
University of Mainz, Germany

Prof. Georg Steinbichler
ENGEL Austria GmbH, Austria

Prof. Helmar Franz
Haitian International Holdings Ltd., China

Dr. Manfred Schmid
Inspire AG, Switzerland

Prof. Suprakas Sinha Ray
Morand Lambla Awardee 2013

Dr. Roland Hingmann (on behalf of the award winning team)
James L. White Innovation Awardee 2013

Symposia Organizers

Mixing and Compounding
Tim Osswald (USA), Ica Manas-Zloczower (USA), Natalie Rudolph (Germany)

Films and Fibers
Dirk Schubert (Germany), Narongrit Sombatsompop (Thailand), Musa Kamal (Canada)

Processing and Forming (Combined)
Michael Gehde (Germany), Michel Huneault (Canada), Jose Kenny (Italy), Hossein Nazockdast (Iran)

Injection Molding and Molds
Peter Elsner (Germany), Andrew Hrymak (Canada), Frank Henning (Germany), Shih-Jung Liu (Taiwan)

Rheology and Rheometry
Manfred Wagner (Germany), Joao Maia (USA), Masayuki Yamaguchi (Japan), Christian Clasen (Belgium)

Polymer Nanostructures and Nanocomposites
Hans-Werner Schmidt (Germany), Sati Bhattacharya (Australia), Sadhan Jana (USA), Tony McNelly (UK), Petra Pötschke (Germany)

Natural Based and Biodegradable Polymers
Christian Bonten (Germany), David Grewell (USA), Rowan Truss (Australia), Elmar Moritzer (Germany)

Polymer Foams
Christian Hopmann (Germany), Chul Park (Canada), Masahiro Ohshima (Japan), Roberto Pantani (Italy)

Polymer Composites
Alois Schlarb (Germany), Jingshen Wu (Hong-Kong), Paolo Ermanni (Switzerland), Ashok Misra (India), Andreas Spörrer (Germany)

Elastomers and Thermoplastic Elastomers
Gert Heinrich (Germany), Kinsuk Naskar (India), Tony McNelly (UK)

Modeling and Simulation
Johannes Wortberg (Germany), John Vlachopoulos (Canada), Rahul Gupta (Australia), Jean-Francois Agassant (France)

Polymer Blends
Hans-Joachim Radusch (Germany), Uttandaraman Sundararaj (Canada), Jozsef Karger-Kocsis (Hungary), Kiyohito Koyama (Japan)

Reactive Processing
Edmund Haberstroh (Germany), Costas Tzoganakis (Canada), Jin Kon Kim (South Korea), Phillipe Cassagnau (France)

Special Symposia
Dietmar Drummer, Werner Hufenbach, Wolfgang Weinhold, Norbert Willenbacher, Volker Altstädt (Germany)

PPS 29

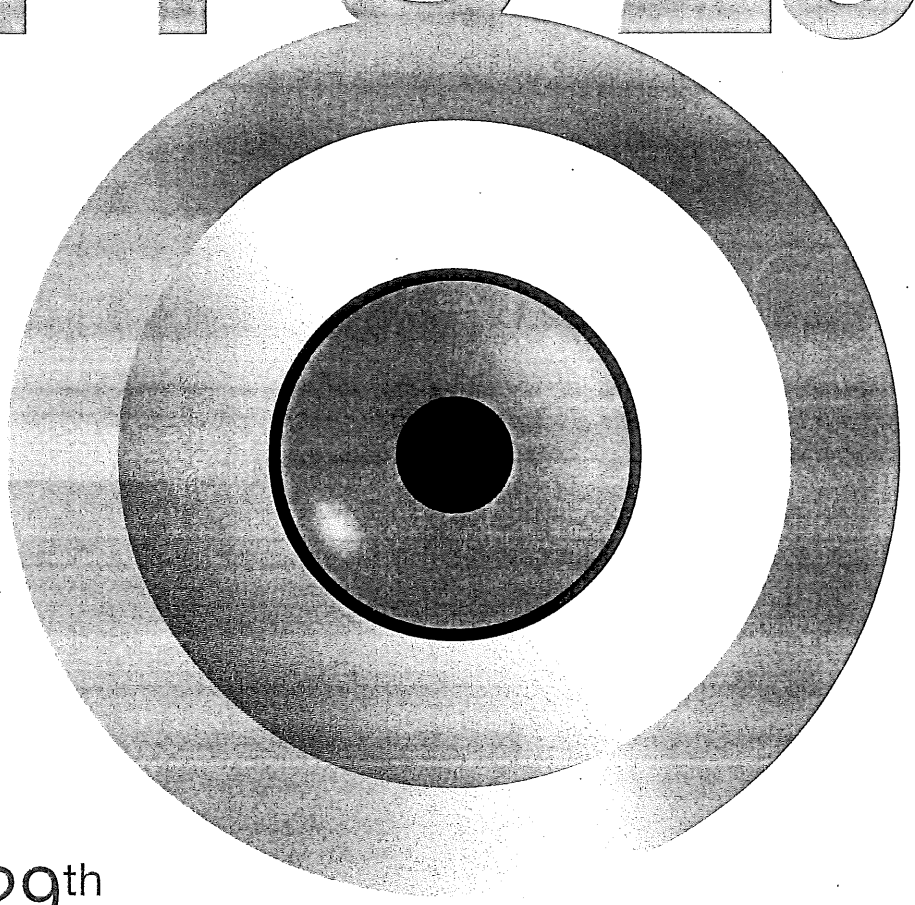

29th International Conference of the

POLYMER PROCESSING SOCIETY

JULY 15 – 19, 2013

NUREMBERG | GERMANY

BOOK OF ABSTRACTS

Organized by:

Neue Materialien
Bayreuth