INVESTIGATION OF STRAIN DISTRIBUTION IN HEXA-ECAP PROCESSED PURE COPPER

Research Assistant. Serkan ÖĞÜT
Marmara University / Faculty of Engineering, Mechanical Engineering Department
serkan.ogut@marmara.edu.tr

Associated Professor Dr.. Aykut KENTLİ
Marmara University / Faculty of Engineering, Mechanical Engineering Department
akentli@marmara.edu.tr

Assistant Professor Dr.. Hasan KAYA
Kocaeli University/Asım Kocabıyık Vocational School/ Machine and Metal Technology Department
hasan.kaya@kocaeli.edu.tr

Abstract

Equal Channel Angular Pressing (ECAP) is one of the common Severe Plastic Deformation (SPD) processes. Thanks to this process, mechanical properties of engineering materials can be enhanced by achieving Ultrafine Grained (UFG) structure in these materials. Hexa-ECAP is a modified ECAP technique which enables route application in ECAP technique for cylindrical specimens. Within this study, the effect of pressing speed and friction coefficient on the strain distribution of Hexa-ECAP processed pure copper was numerically investigated. Firstly, an annealed pure copper sample was subjected to Hexa-ECAP process at the process temperature of 300 ^{0}C. After this step, finite element model (FEM) was generated for Hexa-ECAP process of pure copper using same condition.Then, load-displacement curves obtained from Hexa-ECAP process and FEM simulation were compared in order to validate the FEM. After validating FEM, required finite element analyses for different pressing speeds and friction coefficients were performed. Finally, the effects of pressing speed and friction coefficient on strain distribution were investigated based on the strain values taken from predetermined plane in the specimen.

Keywords: FEM, Hexa-ECAP, Pure Copper

1. INTRODUCTION

Severe Plastic Deformation (SPD) methods have been used by researchers in order to obtain Ultrafine Grained (UFG) materials for last decades. Materials having average grain sizes less than 1 μm are called UFG materials (Valiev et al., 2006). There are many SPD methods like high pressure torsion (HPT) (Zang et al., 2019), twist extrusion (TE) (Vu et al., 2019), accumulative roll bonding (ARB) (Ferreira et al., 2019), Repetitive Corrugation and Straightening (RCS) (Huang et al., 2004) in order to obtain UFG structure in engineering materials. However, the most popular SPD method is Equal Channel Angular Pressing (ECAP) (Priel et al., 2019). ECAP is preferred against other SPD methods because of its applicability and effectiveness. Since it is widely used SPD method, some modifications of this method were developed by researchers. These methods may be listed as Expansion Equal Channel Angular Pressing (Exp.-ECAP) (Boroujeni and Fereshteh-Saniee, 2015), Equal Channel Angular Rolling (ECAR) (Nam et al., 2003), etc. In this study, another modified ECAP method Hexa Expansion Equal Channel Angular Pressing (Hexa-ECAP) (Kaya and Uçar, 2016) method was preferred in order to subject intense strain into workpiece. Thanks to ECAP process and other SPD processes, mechanical properties of materials can be enhanced. The relation between the increase in mechanical properties and strain obtained during SPD processes can be seen in many studies in literature (Nagasekhar et al., 2007). Because of this relation, several studies which aims to maximize the effective strain and the strain homogeneity were carried out by researchers (F. Djavanroodi, M. Ebrahimi, 2010), (Cerri et al., 2009).

Within this study, the effects of friction coefficient and pressing speed on mean effective strain and strain distribution were investigated by performing Finite Element Analysis (FEA) for Hexa-ECAP

process. Firstly, an annealed pure copper sample was subjected to Hexa-ECAP process at process temperature of 300 ^{0}C. Secondly, a finite element model (FEM) was generated in order to simulate Hexa-ECAP process in experiment conditions. After that, load-time curves obtained from Hexa-ECAP experiment and FEA were compared to validate the generated FEM. Once the validation step was accomplished, required finite element analyses for different combination of friction coefficients and pressing speeds were carried out in order to investigate the effects of these parameters mean effective strain and strain distribution.

2. MATERIALS AND METHODS

2.1 Hexa-ECAP Experiment

Hexa-ECAP method was proposed by H. Kaya (Kaya et al., 2014) in order to eliminate the ECAP route applying problems for cylindrical samples. There are six channels in Hexa-ECAP die while classical ECAP dies have two channels. In Hexa-ECAP process, samples are not ejected from die in consecutive pressings in order to eliminate route problems for cylindrical samples. After each pressing, the die is rotated along any axis for desired angles to apply any route i.e. Route A, Route B or Route C instead of rotating pressed samples. For Hexa-ECAP process, a pure copper sample having diameter of 19.5 mm and length of 55 mm was annealed at temperature of 600 ^{0}C for 2 hours. After annealing stage, Hexa-ECAP process was carried out at 300 ^{0}C. MoS_2 was used as lubricant and preferred pressing speed is 2 mm/s. Hexa-ECAP processed sample can be seen in Fig.2. During experiment, load-time curve was obtained in order to use in the validation of the FEM.



Figure1. Hexa die used in ECAP process (Kaya et al., 2014)

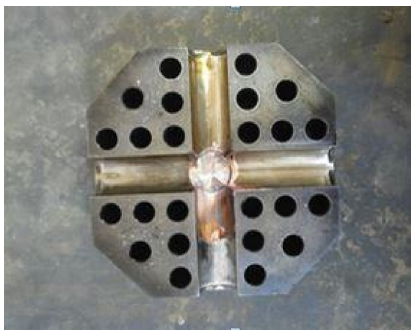

Figure 2. Hexa ECAPed Copper

2.2 Finite Element Analysis Procedure

For this study, 25 finite element analyses for different combination of friction coefficients and pressing speeds were performed. Firstly a finite element model was generated in order to simulate Hexa-ECAP process in experiment conditions. The used element type is tetrahedral element. In meshing process, auto remeshing was preferred in order to obtain high strain values in workpiece. After performing FEA, element number enabling the convergence in effective strain values came out as 40000. Friction coefficient is determined as 0.125 because it leads to parallelism between load-time curves obtained from FEA and Hexa-ECAP experiment. Finite element model generated within this study can be seen in Fig.3.

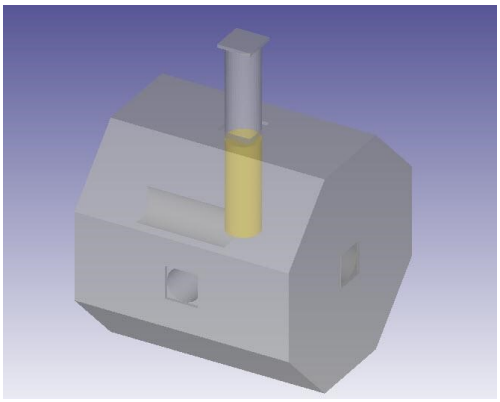

Figure 3. Finite Element Model

After generating FEM, the first finite element analysis was carried out. In order to validate FEM, load–time curve was obtained from the first finite element analysis and compared with the load–time curve was obtained from Hexa-ECAP experiment. When Fig.4 is taken into consideration, it is possible to say that trends of two curves are nearly same. Thanks to the parallelism between two curves, it can be said that the FEM is validated.

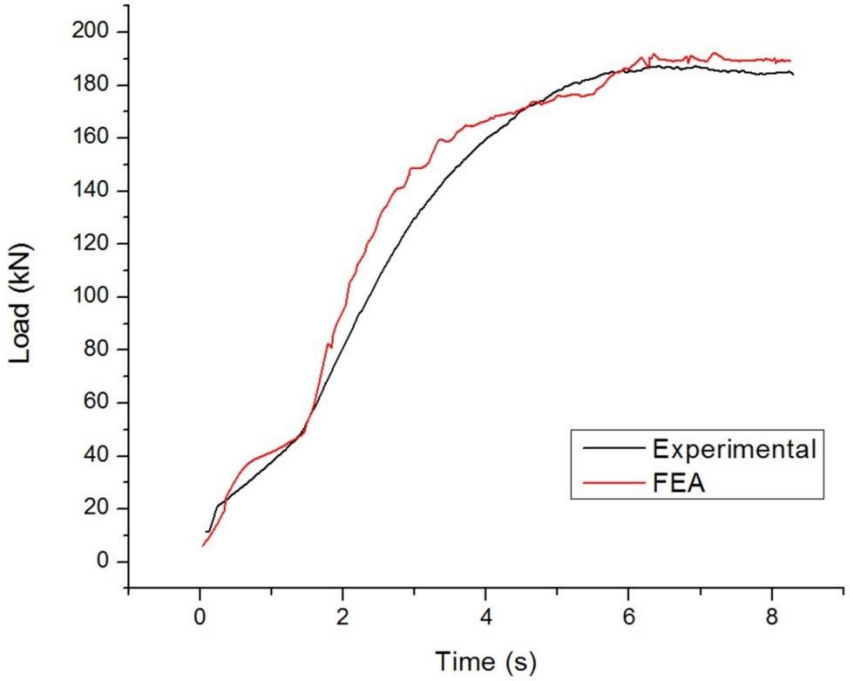

Fig. 4. Load-Time Curves for ECAP Experiment and FEA

After validation stage, required finite element analyses were carried out for different combination of friction coefficient and pressing speed. Pressing speed and friction coefficient values used in each analysis can be seen in Table 1.

Table 1. Parameters used in finite element analyses

Analysis No	Pressing Speed (mm/s)	Friction Coefficient	Analysis No	Pressing Speed (mm/s)	Friction Coefficient	Analysis No	Pressing Speed (mm/s)	Friction Coefficient
1	1	0.05	10	2	0.15	18	4	0.1
2	1	0.075	11	3	0.05	19	4	0.125
3	1	0.1	12	3	0.075	20	4	0.15
4	1	0.125	13	3	0.1	21	5	0.05
5	1	0.15	14	3	0.125	22	5	0.075
6	2	0.05	15	3	0.15	23	5	0.1
7	2	0.075	16	4	0.05	24	5	0.125
8	2	0.1	17	4	0.075	25	5	0.15
9	2	0.125						

3. RESULTS

Coefficient of Variance of effective plastic strain ($CV\varepsilon_p$) was suggested by Basavaraj (Basavaraj et al., 2009) in order to quantify strain inhomogeneity and is as follows:

$$CV\varepsilon_p = \frac{Stdev\varepsilon_p}{Av\varepsilon_p} \quad (1)$$

where $Stdev\varepsilon_p$ is standard deviation of effective strain and $Av\varepsilon_p$ is average effective strain in the transverse plane. Increase in the strain inhomogeneity factor means decrease in homogeneity of strain distribution. Strain values were taken from 50 points in order to calculate standard deviation and average of effective strain. These 50 points can be seen in Fig. 5.

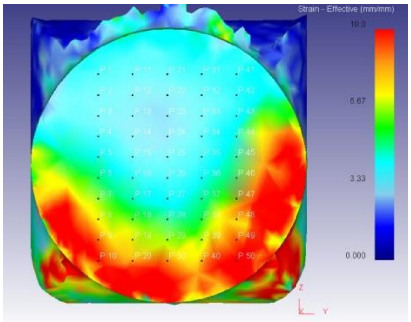

Figure 5. Strain values taken from 50 points

For each analysis strain values were taken from these 50 points as in Fig.5. After obtaining strain values from these points, average or mean effective strain and strain inhomogeneity values were calculated for each combination of friction coefficient and pressing speed. These values can be seen in Fig.6 and Fig. 7.

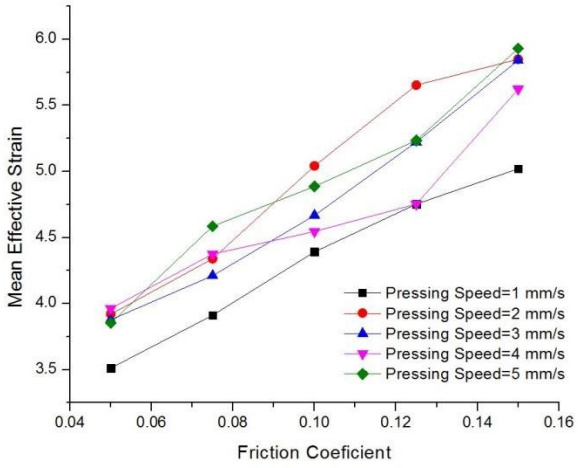

Figure 6. Mean effective strain for different combinations of parameters

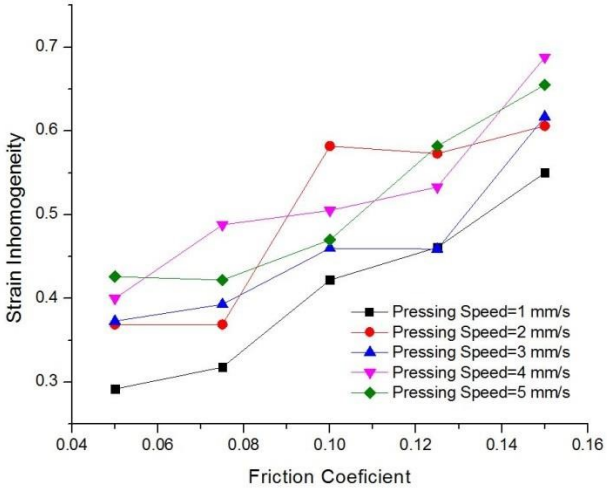

Figure 7. Strain inhomogeneity for different combinations of parameters

4. DISCUSSION

According to Figure 6, it can be said that increase in friction coefficient leads to increase in mean effective strain. This can be attributed to the strain increase in the outer surface of the workpiece. On the other hand, it can be said that there is no significant effect of pressing speed on level of effective plastic strain especially at lower friction coefficient states.

Figure 7 shows that strain inhomogeneity increases due to the increase in friction coefficient. This can be attributed to the strain increase in the outer surface of the workpiece. While effective plastic strain increases in outer parts of the workpiece, it does not change in central parts of the workpiece. This leads to an increase in strain inhomogeneity. When Fig.7 is analysed from the viewpoint of pressing speed, it is seen that there is no significant effect of pressing speed on effective plastic strain inhomogeneity.

5. CONCLUSION

The strain distribution of pure copper processed by equal channel angular extrusion was numerically investigated using 3D finite element software within this study. Thanks to the finite element analyses, the effects of friction coefficient and ram velocity on strain homogeneity and total strain level were investigated. The obtained conclusions are as follow:

1. Higher magnitude of effective plastic strain also can be obtained by higher friction coefficient. However, increase in friction coefficient leads to increase in strain inhomogeneity value as well.

2. Comparing to friction coefficient, ram velocity does not have a significant effect on level of mean effective plastic strain and strain inhomogeneity.

ACKNOWLEDGEMENTS

We would like to thank Prof. Dr. Mehmet UÇAR for his support to the laboratory studies.

REFERENCES

Basavaraj, V.P., Chakkingal, U., Prasanna Kumar, T.S., (2009), Study of channel angle influence on material flow and strain inhomogeneity in equal channel angular pressing using 3D finite element simulation, Journal of materials processing technology, 209.1, 89-95, Doi: 10.1016/j.jmatprotec.2008.01.031

Cerri, E., De Marco, P. P., Leo P., (2009),. FEM and metallurgical analysis of modified 6082 aluminium alloys processed by multipass ECAP: Influence of material properties and different process settings on induced plastic strain, Journal of Materials Processing Technology, 209.3, 1550-1564. DOİ: 10.1016/j.jmatprotec.2008.04.013

Djavanroodi, F., Ebrahimi, M., (2010),Effect of die parameters and material properties in ECAP with parallel channels, Materials Science and Engineering: A, 527.29, 7593-7599 DOİ: 10.1016/j.msea.2010.08.022

Ferreira, F., Ferreira, I., Camacho, E., Lopes, F., Marques, A. C., & Velhinho, A. (2019). Graphene oxide-reinforced aluminium-matrix nanostructured composites fabricated by accumulative roll bonding. Composites Part B: Engineering, 164, 265-271.

Huang, J., Zhu, Y. T., Alexander, D. J., Liao, X., Lowe, T. C., & Asaro, R. J. (2004). Development of repetitive corrugation and straightening. Materials Science and Engineering: A, 371(1-2), 35-39.

Kaya, H., Uçar, M., Cengiz, A., Samur, R., Özyürek, D., Çalişkan, A., (2014), Novel molding technique for ECAP process and effects on hardness of AA7075, Mechanika, 20 (1), 5-10, DOİ: 10.5755/j01.mech.20.1.4207

Kaya H., Uçar M., (2016), The effects of mechanical properties on fatigue behavior of ecap' ed aa7075, High temperature materials and processes (htmp), 225-234, DOİ: 10.1515/htmp-2014-0193

Nagasekhar A. V., Hon Y. T., Seow H. P., (2007), Deformation behavior and strain homogeneity in equal channel angular extrusion/pressing, Journal of materials processing technology 192, 449-452, DOİ: 10.1016/j.jmatprotec.2007.04.093

Nam, C. Y., Han, J. H., Chung, Y. H., & Shin, M. C. (2003). Effect of precipitates on microstructural evolution of 7050 Al alloy sheet during equal channel angular rolling. Materials Science and Engineering: A, 347(1-2), 253-257.

Priel, E., Mittelman, B., Trabelsi, N., Cohen, Y., Koptiar, Y., & Padan, R. (2019). A computational investigation of Equal Channel Angular Pressing of molybdenum validated by experiments. Journal of Materials Processing Technology, 264, 469-485.

Sepahi-Boroujeni, S., & Fereshteh-Saniee, F. (2015). Expansion equal channel angular extrusion, as a novel severe plastic deformation technique. Journal of Materials Science, 50(11), 3908-3919.

Valiev, R. Z., Estrin, Y., Horita, Z., Langdon, T. G., Zechetbauer, M. J., & Zhu, Y. T. 2006. Producing bulk ultrafine-grained materials by severe plastic deformation. Jom, 58(4), 33-39.

Vu, V. Q., Prokof'eva, O., Toth, L. S., Usov, V., Shkatulyak, N., Estrin, Y., ... & Beygelzimer, Y. (2019). Obtaining hexagon-shaped billets of copper with gradient structure by twist extrusion. Materials Characterization.

Zhang, Y., Jin, S., Trimby, P. W., Liao, X., Murashkin, M. Y., Valiev, R. Z., ... & Sha, G. (2019). Dynamic precipitation, segregation and strengthening of an Al-Zn-Mg-Cu alloy (AA7075) processed by high-pressure torsion. Acta Materialia, 162, 19-32.