Intercontinental Geoinformation Days

http://igd.mersin.edu.tr/2020/

Long Short Term Memory (LSTM) Network Models for Ionospheric Anomalies Detection: A Case Study for Mw=7.7 Awaran, Pakistan Earthquake

Mohd Saqib[*1], **Sanjeev Anand Sahu** [1], **Erman Şentürk** [2]

[1]*Mathematics and Computing Department, Indian Institute of Technology (Indian School of Mines), Dhanbad, Jharkhand, India*
[2]*Department of Surveying Engineering, University of Kocaeli, Kocaeli, Turkey*

Keywords
Anomaly Detection
EQ Forecast
Long Short Term Memory
Time Series Analysis
Total Electron Content

ABSTRACT

Since ionospheric variability changes dramatically before the major earthquakes (EQs), the detection of ionospheric anomalies to EQ forecasts has become a new trend in the current era. Therefore, there is a call to identify highly accurate, advance, and intelligent models to identify these anomalies. In this study, we have proposed a deep learning-based method, long short-term memory (LSTM) network, to detect ionospheric anomalies using the Total Electron Content (TEC) time series of Awaran, Pakistan (Mw=7.7) EQ on September 24, 2013. We have taken 45 days TEC data with a 2-h temporal resolution and train the models with an accuracy of 0.07 TECU. After fitted models with optimal hyperparameters, we have applied both to forecast TEC values for one week before the EQ. The anomalies, high differences (crossing the threshold value) between forecasted and observed TEC, are an indication of abnormal activities, e.g. earthquake, space weather etc. In this study, we detected anomalies for the Awaran EQ. We conclude our results with the identification of ionospheric anomalies that occurred before the EQ results showed that strong positive anomalies are recorded 3 days before (on Sep 21) the EQ. These anomalies are thought to be related to Awaran EQ due to the quiet space weather conditions on the anomalies days. This study brings new insights into the AI techniques in the seismoionospheric EQ forecasting.

1. INTRODUCTION

Earthquakes are the most destructive natural hazards, which may claim a huge number of human lives along with huge economic losses for any country (Athukorala and Resosudarmo, 2005). If we become able to found any single clue or prior knowledge about the upcoming EQ, then we will be able to save many lives and escape from capital losses by using precautions. Researchers are working hard to find any prior signal of major EQs and forecasting EQs have become a hot topic among geologists, astronomers, geophysicists, etc. Many studies have been already conducting to show a correlation among anomalies occur in the ionosphere just a few days before EQs (Hattori et al., 2014). However, all of them are based on some statistical analysis or just a complex mathematical model. Artificial Intelligence (AI) can bring revolutionary changes in this field of forecasting EQs based on ionospheric anomalies.

Nowadays, earthquake warning has taken a new turn of prediction when some anomalies are detected in the ionosphere ahead of the major EQ (Hattori et al., 2014). Many researchers have elaborated on different theories and proofs to get the reason behind this correlation. For example, Klimenko et al. 2011, has introduced a mechanism behind the effectuation of ionospheric perturbation due to the electric field that originates from high internal gravity waves. Rozhnoi et al. 2007, has study the lithosphere-ionosphere high coupling by the gravity waves and presented case studies of three major EQs (M>7) which happened in November, 2004 in Japan. Pulinets 2009, has acknowledged another reason for ground and atmosphere coupling is a potential difference between them. However, any physical reason behind this coupling did not approve yet. So, we have only way to understand such theory is that conduct statistical analysis of TEC values before major EQs and that is why much statistical analysis have previously been proposed for different EQs e.g. in Guo et al. 2015, investigates TEC anomalies respond to the EQ (M=8.2) of 1 April, 2014 in Chile. Ouzounov et al. 2011, analyzed the ionospheric perturbation that occurred before the Tohoku EQ (M=9)

* **Corresponding Author**

*(msaqib.cs@gmail.com) ORCID ID 0000-0003-2125-2162
(sanjeev@iitism.ac.in) ORCID ID 0000-0002-3514-6400
(erman.senturk@kocaeli.edu.tr) ORCID ID 0000-0002-0833-7113

Cite this study

M. Saqib, S. A. Sahu & E. Şentürk (2020). Long Short Term Memory (LSTM) Network Models for Ionospheric Anomalies Detection: A Case Study for Mw=7.7 Awaran, Pakistan Earthquake. Intercontinental Geoinformation Days (IGD), page numbers, Mersin, Turkey

happened on 11 March, 2011 in Japan, and Akhoondzadeh et al. 2010, investigate four EQs (M>6) using GPS data and found positive results of coupling. Liu et al. 2013 have successfully concluded about the lithosphere-ionosphere coupling from all these investigations and it has also revealed that major anomalies detected 1-4 days before major EQs. Now, when it is so clear that TEC perturbations reveal several days before any EQ, it can play an important role as a significant feature in EQs forecasting.

Past decades were emerging for AI, machine learning, sensing techniques, Internet of Things (IoT) and have been applied for multiple fields of seismology e.g. EQ magnitude prediction (Adeli and Panakkat, 2009), seismic signal acceleration classification (Andreadis et al., 2007), EQ detection (Beyreuther and Wassermann, 2008), seismic arrival prediction (Beyreuther and Wassermann, 2008). Furthermore, Li et al, 2018 has been shown that the EQ data can be to distinguish EQ and non-EQ based on P-wave and S-wave arrival times using ML. Another study has presented a generative adversarial network (GAN) an automatic feature extractor, and trained a Random Forest classifier with about 700,000 EQ and noise waveforms which can recognize 99.2% of the EQ P waves and 98.4% of the noise signals (Li et al. 2018). That is why taking TEC values as an important feature for a strong forecast about an EQ becomes crucial and many more already started like in a study (Akhoondzadeh, 2013) used Genetic Algorithm (GA) to predict TEC values before the Solomon EQ (M=8) and investigated that if the difference between forecasted and observed value, exceeds the pre-defined threshold value, then it could be EQ anomaly. In the same way, we also processed our research but using different approach. In our study we have taken LSTM, a Recurrent Neural Network (RNN), deep learning method to time series analysis of TEC values so that we can get an idea about TEC values in normal days. After forecasting TEC, we used these values an estimator for anomalies detector.

2. MODELING AND EVALUATION

2.1. Data Description and Preprocessing

We have selected the strong (Mw=7.7) Awaran EQ for the analysis and examine the proposed model. The EQ occurred on Sep 24, 2013 11:29:47 (UTC) and the epicenter was 61 km north-north-east (NNE) of Awaran, Pakistan (26.951°N 65.501°E). The detail of EQ recorded from the National Centers for Environmental Information (https://www.ngdc.noaa.gov/hazard/). After, finalizing EQ, we fetch the TEC value from the same coordinates and time as well. The unit of TEC is TECU where 1 TECU is equal to 10^{16} el/m^2. The ionospheric TEC data are provided by the Crustal Dynamics Data Information System (CDDIS). CDDIS is one of the Earth Observing System Data and Information System (EOSDIS) Distributed Active Archive Centers (DAACs), part of the NASA Earth Science Data and Information System (ESDIS) project. Datasets and related data products and services are provided by CDDIS, managed by the NASA ESDIS project. The parent directory is available on CDDIS NASA (ftp://cddis.nasa.gov/gnss/products/ionex/).

We have split the data in three parts: 1) the data from Aug 1, 2013 to Sep 14, 2013 has chosen for the training the model, 2) data from Sep 14, 2013 to Sep 19, 2013 has selected for evaluating the accuracy of the model, and 3) from Sep 19, 2013 to Sep 26, 2013 are the actual data for which has chosen for forecast TEC, take difference and detecting the anomalies.

The magnetic activity indices Kp, disturbance storm-time (Dst), and solar activity indices solar radio flux (F10.7), and solar wind speed (V_{SW}), which are freely available in the OMNI website (https://omniweb.gsfc.nasa.gov/form/dx1.html) were also analyzed to reveal the space weather effect on ionospheric anomalies.

2.2. Space-weather conditions before the EQ

We used the Dst, V_{SW}, Kp and F10.7 space weather indices to show the effect of space weather on TEC time series from Sep 19 to Sep 24, 2013. Fig. 1a and 1c demonstrate the variations of Dst and Kp magnetic activity indices. These indices indicate the quiet magnetic activity before the EQ where Dst values range between ±20 nT. Kp values are less than 4 except for Sep 19 and 24. Figure 1b and 1d present the variations of V_{SW} and F10.7 solar activity indices. The V_{SW} values indicate a solar wind on Sep 19 and 20, the index values vary between 500-600 km/s. F10.7 values are between 105-115 sfu before the EQ, which indicates low solar activity.

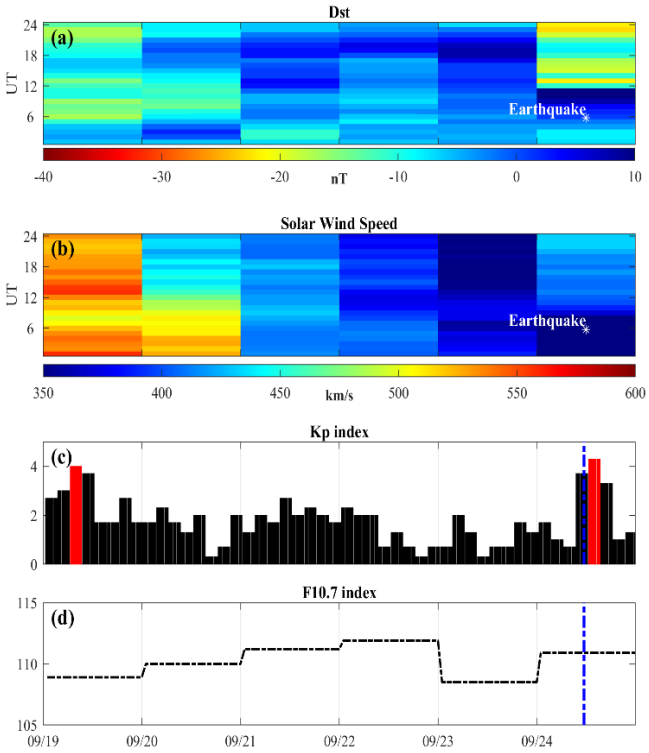

Figure 1. Space weather indices from Sep 19-24, 2013. (a) Dst, (b) solar wind speed, (c) Kp index, (d) F10.7 index values. The vertical blue dash-dotted lines in graphs indicate EQ time.

2.3. Model Formulation

The proposed model, LSTM, is an extension of RNN which overcome the problem of vanishing gradient. The special architectures of the LSTM-RNN network (**Hata! Başvuru kaynağı bulunamadı.**) made it possible to keep those learning within the network which are fare away from the forecast point and predict based on these learning. LSTM has various components which has capability to forget or store the information using following formulations:

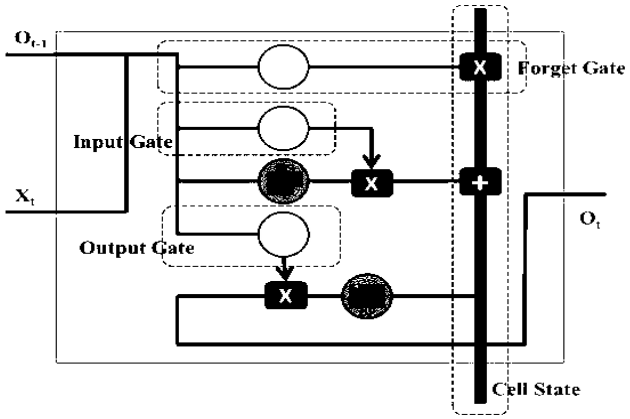

Figure 2. Node architecture for LSTM

$$f_t = \sigma(w_f[O_{t-1}, X_t] + b_f) \quad (1)$$

$$i_t = \sigma(w_i[O_{t-1}, X_t] + b_i) \quad (2)$$

$$C_t^{\sim} = tanh(w_c[O_{t-1}, X_t] + b_c) \quad (3)$$

$$C_t = f_t * C_{t-1} + i_t * C_t^{\sim} \quad (4)$$

$$h_t = \sigma(w_O[O_{t-1}, X_t] + b_O) \quad (5)$$

$$O_t = h_t * \tanh(C_t) \quad (6)$$

Where, X_t is input vector, $W_t = \begin{bmatrix} w_f \\ w_i \\ w_c \\ w_o \end{bmatrix}$ weight vector, bias $b_t = \begin{bmatrix} b_f \\ b_i \\ b_c \\ b_o \end{bmatrix}$, and output O_t at time t.

2.4. Evaluation Criteria

Various metrics employed to evaluate the performance of the purposed model; Mean Square Error (MSE), Root Mean Square Error (RMSE), Normalized Mean Square Error (NMSE), Normalized Root Mean Square Error (NRMSE), and Standard Deviation (SD). The calculation methods for each are the following:

$$\text{MSE} = \frac{1}{n}\sum_{i=1}^{n}(\text{TEC}_{\text{Predicted}} - \text{TEC}_{\text{Actual}})^2 \quad (7)$$

$$\text{RMSE} = \sqrt{\frac{1}{n}\sum_{i=1}^{n}(\text{TEC}_{\text{Predicted}} - \text{TEC}_{\text{Actual}})^2} \quad (8)$$

$$\text{NMSE} = MSE / [\max(\text{TEC}_{\text{Actual}}) - \min(\text{TEC}_{\text{Actual}})] \quad (9)$$

$$\text{NRMSE} = RMSE / [\max(\text{TEC}_{\text{Actual}}) - \min(\text{TEC}_{\text{Actual}})] \quad (10)$$

$$\text{SD} = \sqrt{\frac{1}{n-1}\sum_{i=1}^{n}(\text{TEC}_{\text{Actual}} - \overline{\text{TEC}_{\text{Actual}}})^2} \quad (11)$$

Where, n is the number of observation involves in evaluating the model and $\overline{\text{TEC}_{\text{Actual}}}$ is the value of mean for actual TEC observations employed for evaluation.

3. IMPLEMENTATION

To implement the proposed model, code written in Python.3 using Keras library, debugged on Jupyter Notebook which can be download from the link: https://jupyter.org/. Jupyter Notebook is a nonprofit organization created to "develop open-source software, open-standards, and services for interactive computing across dozens of programming languages". We have used two hidden layer with 48-48 nodes in each with 20% dropout in LSTM. Also, we take batch size 12 observations (number of data point in a day) and 30% data for validation. We have also used Adam Optimizer to update the hyperparameters of LSTM and MSE for improve accuracy.

4. RESULTS AND DISCUSSIONS

We implemented the model and evaluate using evaluation data. We used different matrices for evaluate the model which has present in Table 1. The RMSE is 3.51 and NRMSE is 0.07 which is good accuracy. We forecasted TEC values during one week before the EQ which represented in Figure 3. After forecasting TEC for a normal situation, differences between observed and forecast TEC calculated and the error crossing a threshold is called anomalies (see Figure 4). In Figure 4, red colour circle shows the strong positive anomaly on Sep 21, 2013 which is three days before the EQ.

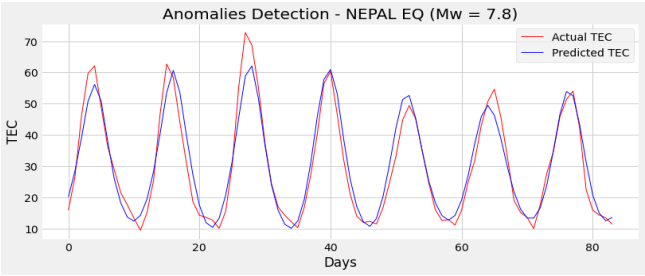

Figure 3. Forecast and observed TEC values

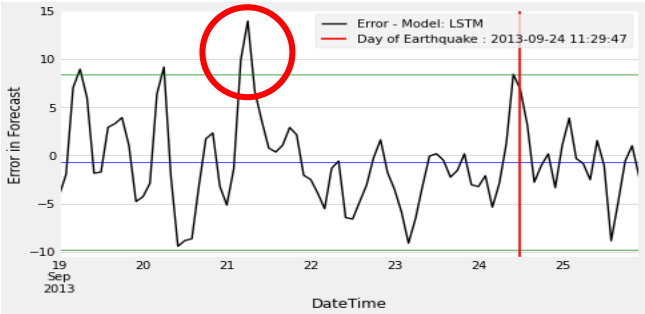

Figure 4. Error calculated

Table 1 Matrices of proposed model

Matrices	MSE	RMSE	NMSE	NRMSE	SD
Values	12.34	3.51	0.25	0.07	3.24

5. CONCLUSION

We have implemented an AI based technique, LSTM to forecast ionospheric TEC values. The forecasting values gives a deep insight into the future estimated TEC values (what it should be during a normal day). And, when we become able to forecast TEC, we can estimate the significant differences between forecasted and observed TEC and abnormalities of the data which have observed because of a sudden change in the ionosphere. In our case, we detected anomalies three days before the Awaran EQ. Such proposed model can be new method to make an earthquake warning system.

ACKNOWLEDGEMENT

The authors are thankful to the IGS network for providing the Global Ionosphere Maps, the United States Geological Survey (USGS) for providing information about the EQ and NASA OMNIWeb for providing the space weather indices.

REFERENCES

Adeli, H., & Panakkat, A. (2009). A probabilistic neural network for earthquake magnitude prediction. Neural networks, 22(7), 1018-1024.

Akhoondzadeh, M. (2013). Genetic algorithm for TEC seismo-ionospheric anomalies detection around the time of the Solomon (Mw= 8.0) earthquake of 06 February 2013. Advances in Space Research, 52(4), 581-590.

Akhoondzadeh, M., Parrot, M., & Saradjian, M. R. (2010). Electron and ion density variations before strong earthquakes (M> 6.0) using DEMETER and GPS data. *Natural Hazards and Earth System Sciences*, *10*(1), 7–18.

Andreadis, I., Tsiftzis, I., & Elenas, A. (2007). Intelligent seismic acceleration signal processing for damage classification in buildings. IEEE Transactions on Instrumentation and Measurement, 56(5), 1555-1564.

Athukorala, P. C., & Resosudarmo, B. P. (2005). The Indian Ocean tsunami: Economic impact, disaster management, and lessons. Asian economic papers, 4(1), 1-39.

Beyreuther, M., & Wassermann, J. (2008). Continuous earthquake detection and classification using discrete Hidden Markov Models. Geophysical Journal International, 175(3), 1055-1066.

Guo, J., Li, W., Yu, H., Liu, Z., Zhao, C., & Kong, Q. (2015). Impending ionospheric anomaly preceding the Iquique Mw8.2 earthquake in Chile on 2014 April 1. *Geophysical Journal International*, *203*(3), 1461–1470.

Hattori, K., Hirooka, S., Kunimitsu, M., Ichikawa, T., & Han, P. (2014, August). Ionospheric anomaly as an earthquake precursor: Case and statistical studies during 1998–2012 around Japan. In 2014 XXXIth URSI General Assembly and Scientific Symposium (URSI GASS) (pp. 1-1). IEEE.

Klimenko, M. V., Klimenko, V. V., Karpov, I. V., & Zakharenkova, I. E. (2011). Simulation of seismo-ionospheric effects initiated by internal gravity waves. Russian Journal of Physical Chemistry B, 5(3), 393-401.

Li, W., Narvekar, N., Nakshatra, N., Raut, N., Sirkeci, B., & Gao, J. (2018, March). Seismic data classification using machine learning. In 2018 IEEE Fourth International Conference on Big Data Computing Service and Applications (BigDataService) (pp. 56-63). IEEE.

Li, Z., Meier, M. A., Hauksson, E., Zhan, Z., & Andrews, J. (2018). Machine learning seismic wave discrimination: Application to earthquake early warning. Geophysical Research Letters, 45(10), 4773-4779.

Liu, J. Y., Yang, W. H., Lin, C. H., Chen, Y. I., & Lee, I. T. (2013). A statistical study on the characteristics of ionospheric storms in the equatorial ionization anomaly region: GPS-TEC observed over Taiwan. Journal of Geophysical Research: Space Physics, 118(6), 3856-3865.

Ouzounov, D., Pulinets, S., Romanov, A., Romanov, A., Tsybulya, K., Davidenko, D., ... & Taylor, P. (2011). Atmosphere-ionosphere response to the M9 Tohoku earthquake revealed by multi-instrument space-borne and ground observations: Preliminary results. Earthquake Science, 24(6), 557-564.

Pulinets, S. A. (2009). Physical mechanism of the vertical electric field generation over active tectonic faults. Advances in Space Research, 44(6), 767-773.

Rozhnoi, A., Solovieva, M., Molchanov, O., Biagi, P. F., & Hayakawa, M. (2007). Observation evidences of atmospheric Gravity Waves induced by seismic activity from analysis of subionospheric LF signal spectra. *Natural Hazards and Earth System Sciences*, *7*, 625–628.